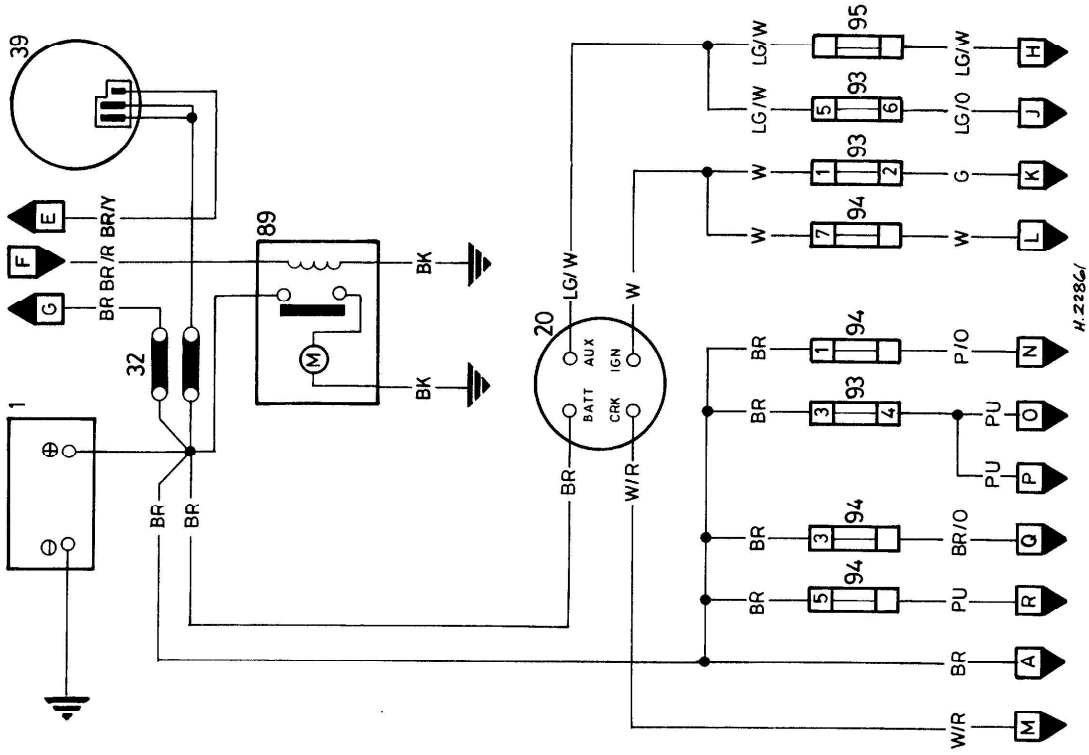

Wiring diagram 20 - Power distribution circuit (fuel-injected models)

E to Wiring diagram 22
F to Wiring diagram 21
G to Wiring diagram 21
H To Wiring diagram 26
J to Wiring diagrams 22, 24, 25, 31
K to Wiring diagrams 19, 23, 32
L to Wiring diagrams 21, 22
M to Wiring diagram 21
N to Wiring diagrams 23, 28
O to Wiring diagrams 19, 26
P to Wiring diagram 27
Q to Wiring diagram 27
R to Wiring diagram 25
A to Wiring diagram 19

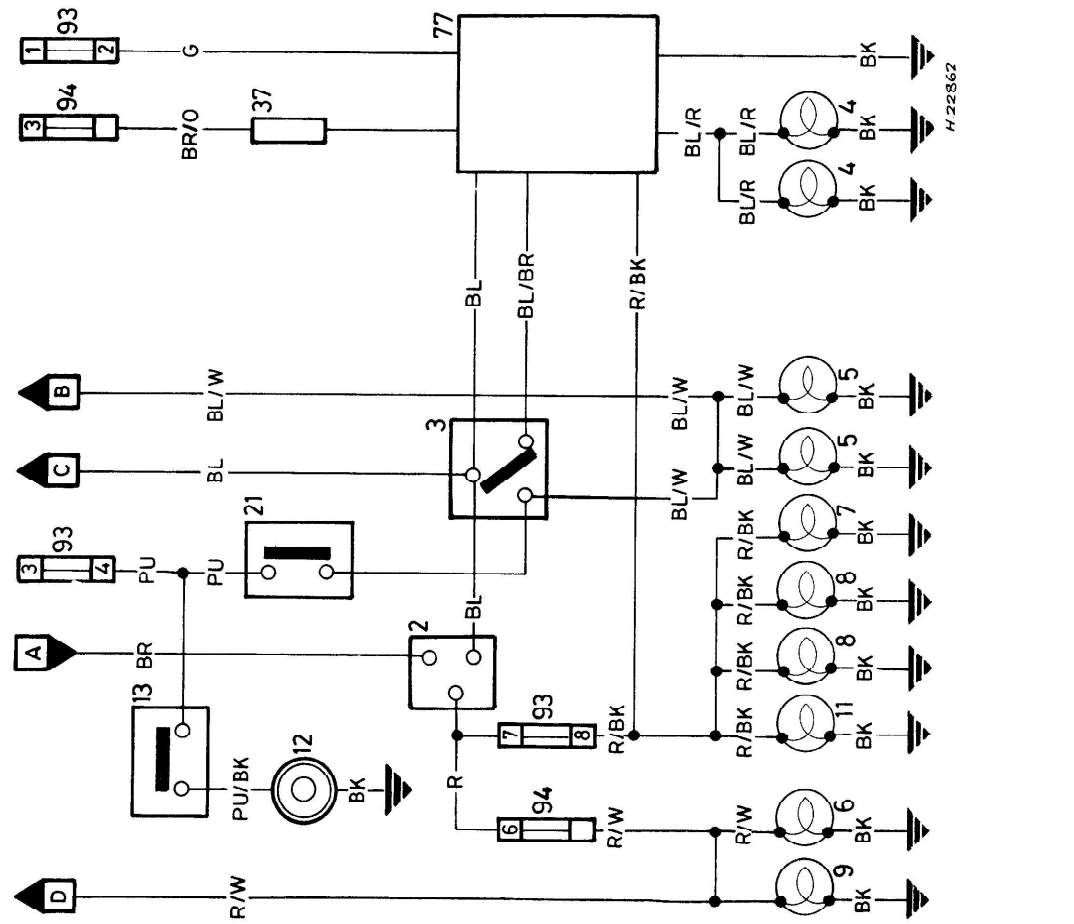

Wiring diagram 19 - Dim-dip lighting and horn circuit (fuel-injected models)

A To power distribution circuit
B To instrument circuit
C To foglight circuit
D To instrument circuit